INOVANCE

H0U Series PLC

Compact, integrated display and controller

Features & functions

- Combined PLC and monochrome text display
- 100 ns execution time per single, basic instruction
- Program capacity:
  - PLC 8 K Steps
  - TOD 56 KB
- Device memory
  - Auxiliary relays 3,584 points
  - Timers 256 points
  - Counters 256 points
  - Data registers 8,528 points
- High speed inputs: up to 60 kHz
- High speed outputs: up to 100 kHz
- 25 keys with user defined functions
- Two built-in sets of RS485 communication ports
- Supports Modbus-RTU & CANlink protocols
- Supports digital I/O, analog I/O, temperature detection
- PLC programming language:
  - Ladder diagram (LD)
  - Instruction list (IL)
  - Sequential function chart (SFC)

NEW

Built-in USB for PLC program download/upload & TOD program download

CE

Operation in high ambient temperature 55°C
Please note: If operating above 40°C derating is required

PC-based software: HTodEditor easy TOD programming tool

PC-based software: AutoShop easy programming tool

Product layout

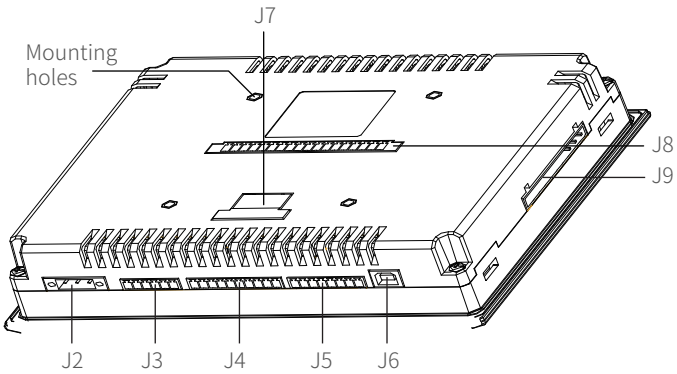

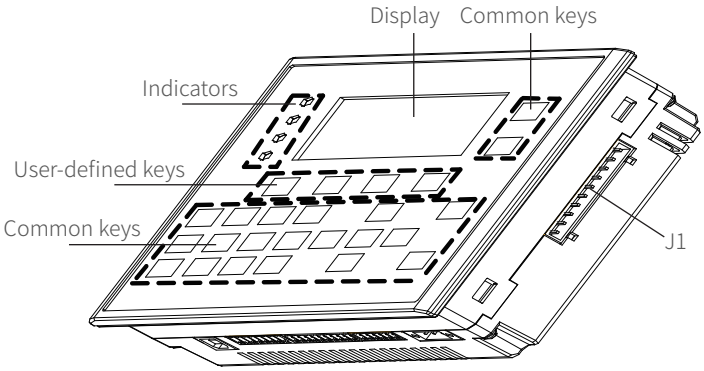

Terminal	Function description
J1	Output terminals (Y0 to Y7)
J2	Power supply interface
J3	Serial communication port (RS485)
J4	Input terminals (X0 to X7)
J5	Input terminals (X10 to X17)
J6	USB client (type B)
J7	Used for extended CAN function
J8	Interface for in-built analog extension card
J9	Output terminals (Y10 to Y17)

INOVANCE

General specifications

PLC model		H0U-0808MR-XP	H0U-0808MRT-XP	H0U-1616MR-XP	H0U-1616MRT-XP	H0U-0808MR-XP-6AT	H0U-0808MRT-XP-6AT	H0U-1616MR-XP-6AT	H0U-1616MRT-XP-6AT
Dimensions	H x W x D	H: 90 mm; W: 70 mm; D: 75 mm							
Power supply		24 Vdc ± 20%							
Integrated DIs	Total inputs	8	8	16	16	8	8	16	16
	High-speed inputs	2 x 60 kHz 4 x 10 kHz*1							
Built-in DOs	Total outputs	8	8	16	16	8	8	16	16
	High-speed outputs	N/A	2 x 100 kHz	N/A	2 x 100 kHz	N/A	2 x 100 kHz	N/A	2 x 100 kHz
	Output type	Relay	4 x Relay 4 x Transistor (sink/NPN)	Relay	12 x Relay 4 x Transistor (sink/NPN)	Relay	4 x Relay 4 x Transistor (sink/NPN)	Relay	12 x Relay 4 x Transistor (sink/NPN)
Built-in AIs	Total inputs	N/A				2			
	Range					Voltage range: -10 V~10 V Current range: 4~20 mA; 0~20 mA			
Built-in AOs	Total outputs					2			
	Range					Voltage range: -10 V~10 V Current range: 4~20 mA; 0~20 mA			
Temperature detection	Total inputs					2			
	Type					PT100/TC			
Built-in ports	Serial port	COM0 (RS485), COM1 (RS485), COM2 (RS485)							
	USB (device)	Type-B program download/upload							
Display specs.	Category	LCD dot matrix display							
	Resolution	192 x 64							
	Display range	104 x 39 mm							
Auxiliary keys		25 keys							
Mass		105 g							

*1. Total added input frequency cannot exceed 70 kHz

Accessories list

Model	Function description	Part no.
IT5-USB-CAB	USB HMI programming cable with type A & B male connectors. Length: 2 m	15041123

Interface description

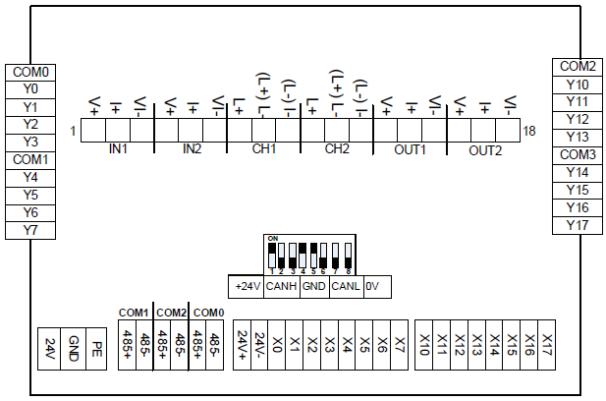

Note: This diagram describes all interfaces, but some of them are not available in all models.

Pobrano z: https://sterowniki-plc.net/sterownik-plc-16-wejsc-i-16-wyjsc-przekaznikowych-h0u-1616mr-xp-6at-int-inovance